Version	1. 0	2019-06-13	New Issue

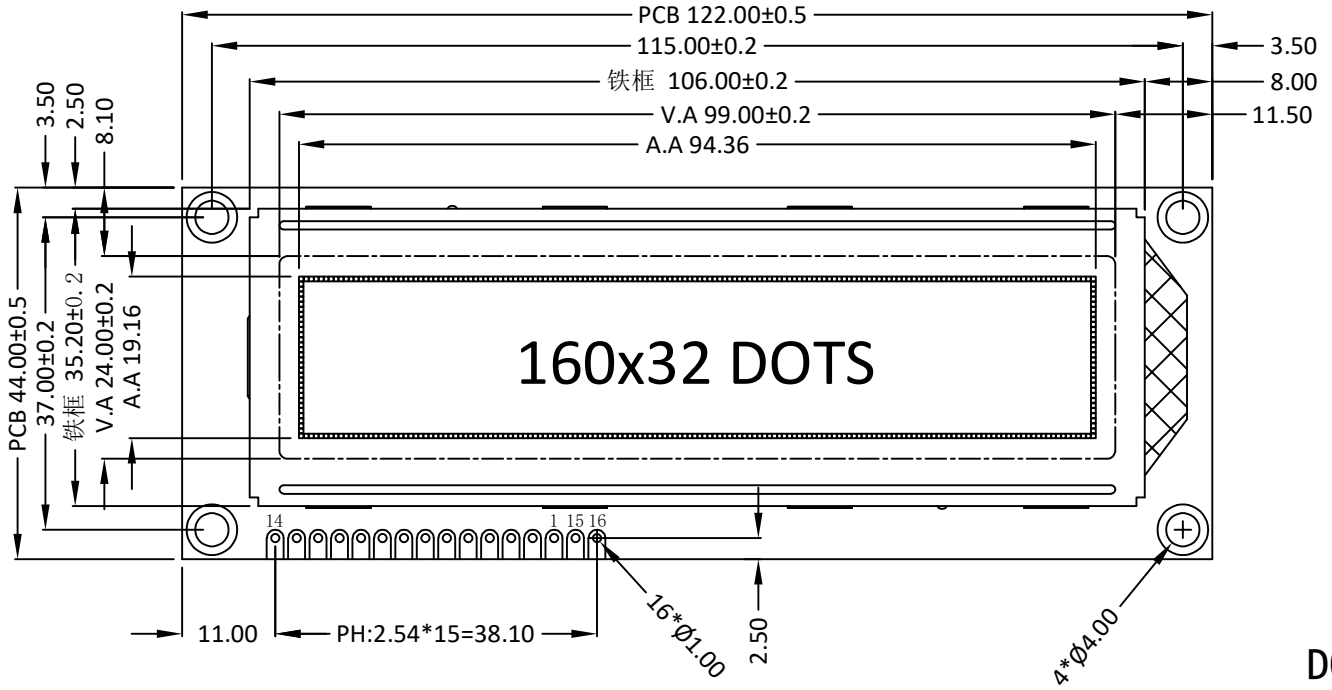

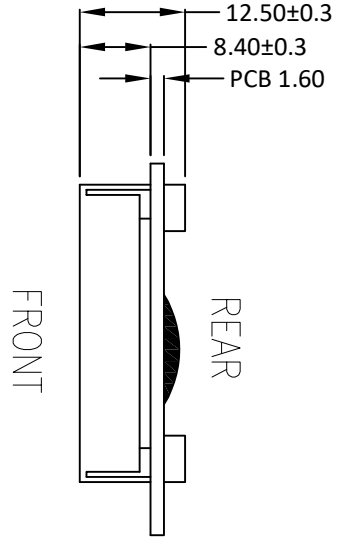

PIN	SYMBOL
1	VSS
2	VDD(3.3V)
3	V0
4	RS
5	R/W
6	E
7	DB0
8	DB1
9	DB2
10	DB3
11	DB4
12	DB5
13	DB6
14	DB7
15	LED-A(3.3V)
16	LED-K

DOT SIZE

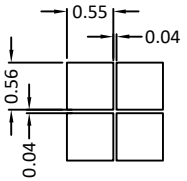

SPECIFICATIONS:

1. DISPLAY TYPE: FSTN / POSITIVE (GRAY) / TRANSFLECTIVE
2. DRIVE IC: AIP31020 or EQV.
3. CONNECTOR: ZEBRA
4. OPERATING VOLTAGE: VOP = 7.5V, VDD = 3.3V
5. OPERATING TEMPERATURE: -20 ~ 70°C
6. STORAGE TEMPERATURE: -30 ~ 80°C
7. DRIVE MODE: 1/32 DUTY, 1/6 BIAS
8. VIEWING ANGLE: 6 O'CLOCK
9. BACKLIGHT: WHITE LED, I = 40mA
10. CUSTOMER PART NO.: BOCEN STANDARD PRODUCT

BOCEN DISPLAY TECHNOLOGY CO., LTD.		
DESIGNED BY: Shawn	BB16032-02	VERSION: 1.0
CHECKED BY: William		NO.: 1 OF 1
APPROVED BY: Rio		UNIT: mm
Website: http://www.bocentech.com		DATE: 2019-06-13