Version	1. 0	2021-2-27	New Issue

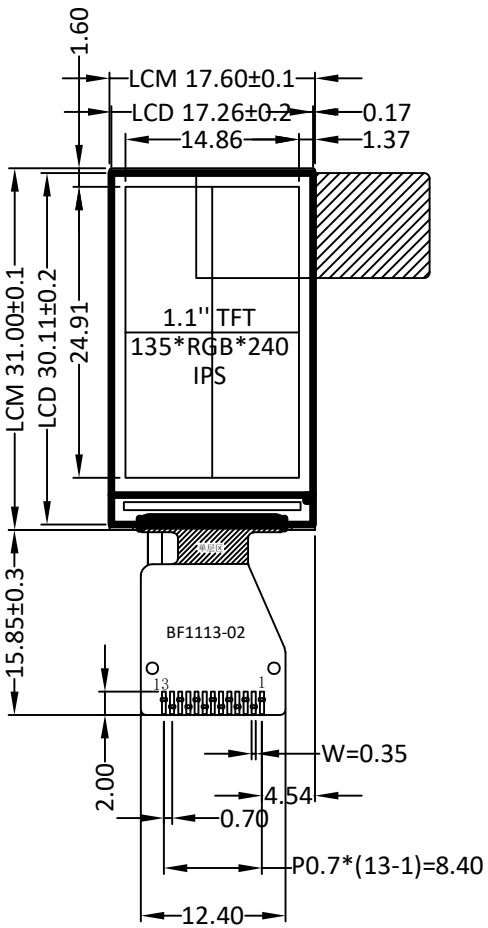

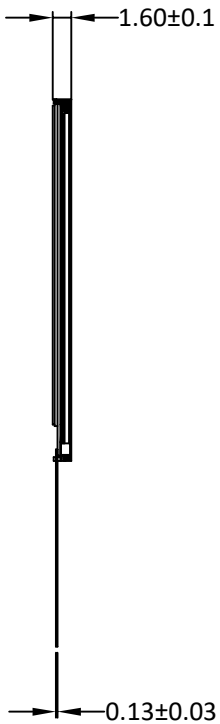

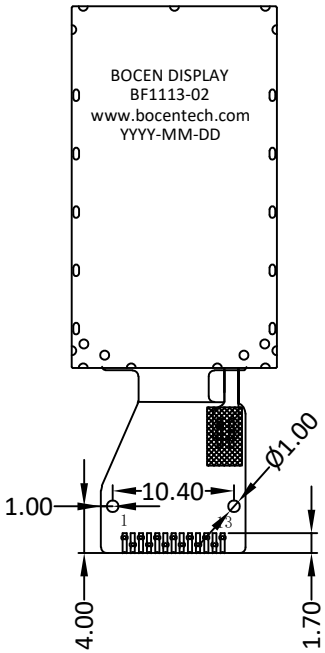

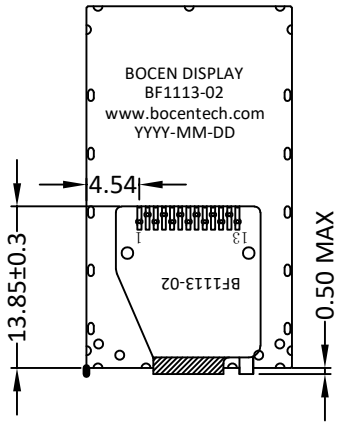

FPC弯折示意图
FPC展开出货

PIN	SYMBOL
1	NC
2	NC
3	SDA
4	SCL
5	RS
6	RESET
7	CS
8	GND
9	NC
10	VDD
11	LEDK
12	LEDA
13	GND

SPECIFICATIONS:

1. DISPLAY TYPE: 1.1''/ 135*240
2. DRIVE IC: ST7789V2
3. OPERATING TEMPERATURE: -20 ~ 70°C
4. STORAGE TEMPERATURE: -30 ~ 80°C
5. VIEWING ANGLE: IPS
6. BACKLIGHT: 1 WHITE LED, 20MA
7. CUSTOMER PART NO.: BOCEN STANDARD PRODUCT

Backlight Circuit Diagram

VF=3.0V IF=20mA

BOCEN DISPLAY TECHNOLOGY CO., LTD.		
DESIGNED BY: David	BF1113-02	VERSION: 1.0
CHECKED BY: William		NO.: 1 OF 1
APPROVED BY: Rio		UNIT: mm
Website: http://www.bocentech.com		DATE: 2021-2-27