Version	1. 0	2022-3-21	New Issue

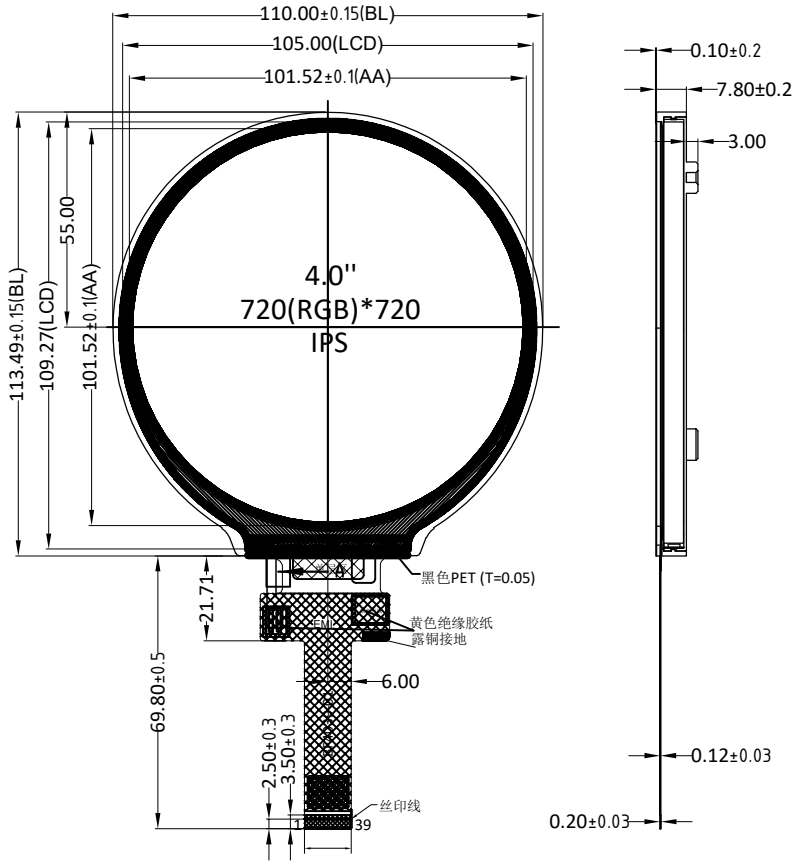

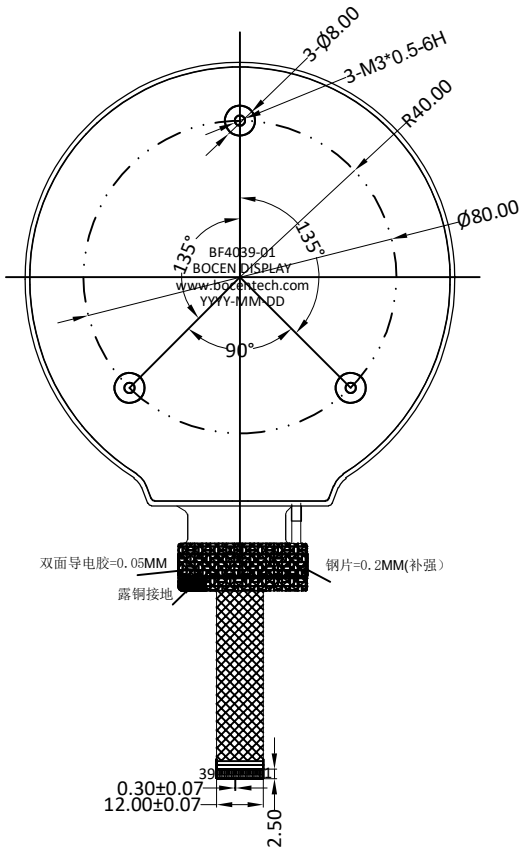

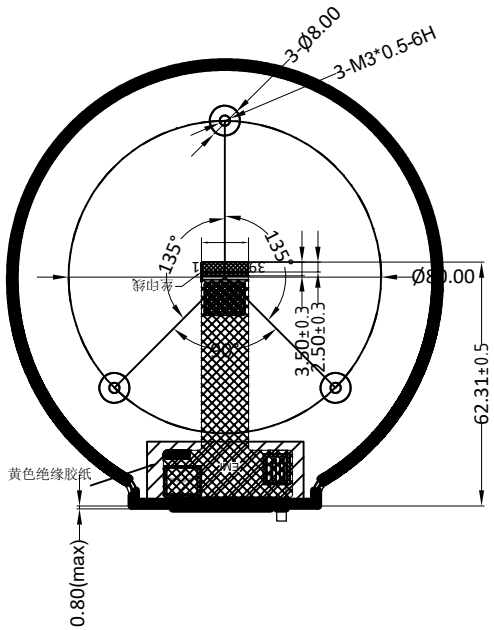

PIN	SYMBOL
1	GND
2	LEDA
3	LEDA
4	LEDK
5	LEDK
6	GND
7	VDD(-6.3V)
8	VDD(-6.3V)
9	GND
10	VDD(+6.3V)
11	VDD(+6.3V)
12	GND
13	IOVCC(1.8V)
14	IOVCC(1.8V)
15	GND
16	RESET
17	GND
18	TE
19	GND
20	NC
21	NC
22	NC
23	GND
24	LAN2_P
25	NC
26	LAN2_N
27	GND
28	CLK_P
29	NC
30	CLK_N
31	GND
32	LAN1_P
33	NC
34	LAN1_N
35	GND
36	LAN0_P
37	NC
38	LAN0_N
39	GND

SPECIFICATIONS:

1. DISPLAY TYPE: 4.0'' TFT / IPS / 720*720
2. DRIVE IC: ICNL9707
3. OPERATING TEMPERATURE: -30 ~ 80°C
4. STORAGE TEMPERATURE: -30 ~ 80°C
5. BRIGHTNESS: 800 CD/M² (MIN)
6. BACKLIGHT: 20 WHITE LED
7. CUSTOMER PART NO.: BOCEN STANDARD PRODUCT

LED CIRCUIT DIAGRAM

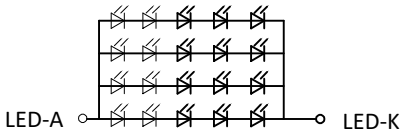

If=180mA, Vf=15V

BOCEN DISPLAY TECHNOLOGY CO., LTD.		
DESIGNED BY: David	BF4039-01	VERSION: 1.0
CHECKED BY: William		NO.: 1 OF 1
APPROVED BY: Rio		UNIT: mm
Website: http://www.bocentech.com		DATE: 2022-3-21