Revised Record	1.0	2018-4-26	New Issue

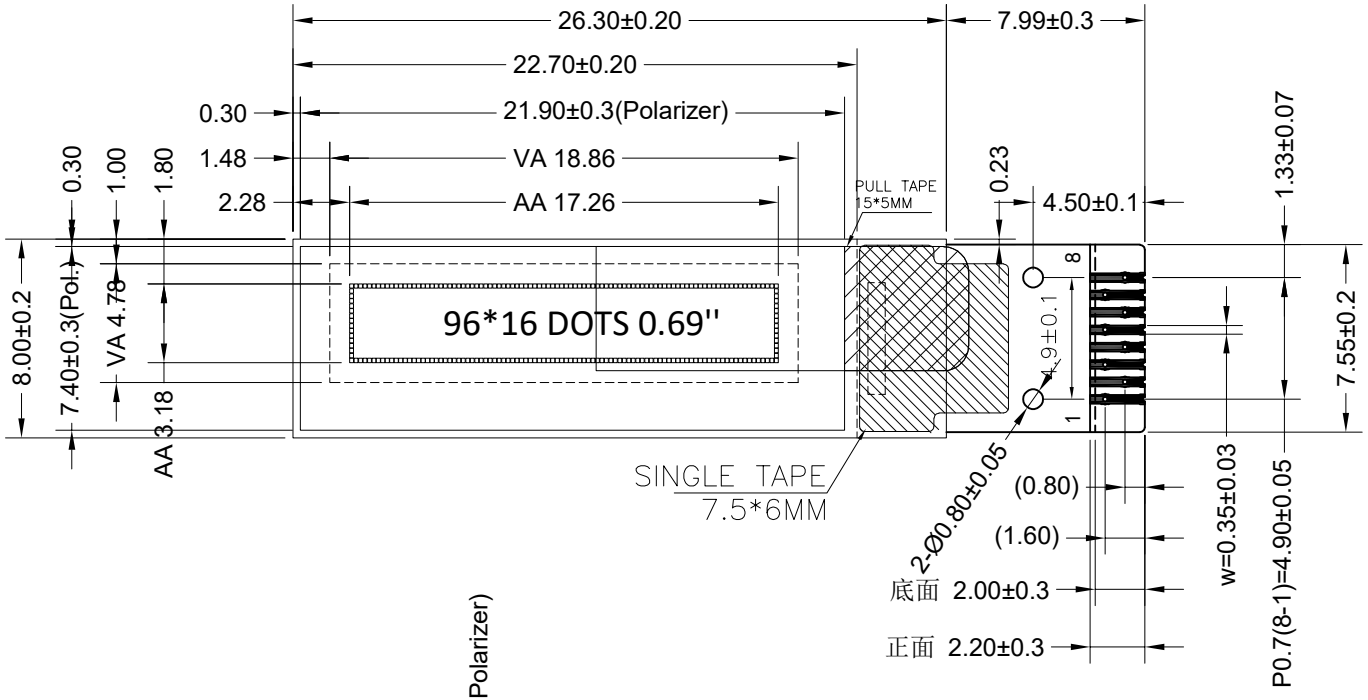

PIN	SYMBOL
1	VSS
2	RES#
3	SCL
4	SDA
5	IREF
6	VCOMH
7	VCC
8	VDD

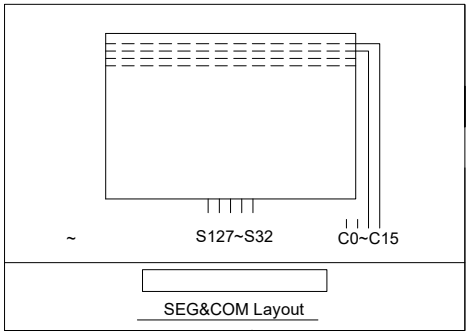

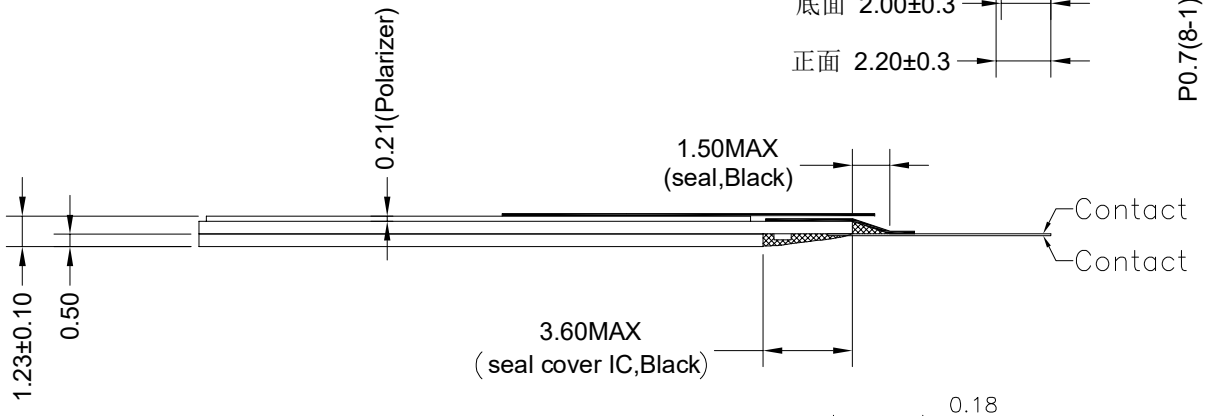

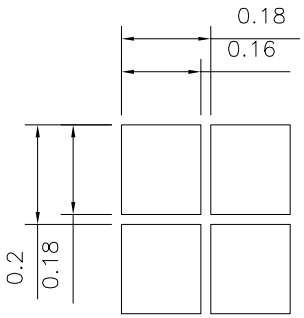

SPECIFICATIONS:

1. DISPLAY TYPE: OLED
2. DISPLAY SIZE: 0.69''
3. COLOR: WHITE
4. DOT MATRIX: 96x16
5. DRIVE IC: SSD1306BZ
6. CUSTOMER PART NO.: BOCEN STANDARD PRODUCT

BOCEN DISPLAY TECHNOLOGY CO., LTD.		
DESIGNED BY: Shawn	BO9616-05	VERSION: 1.0
CHECKED BY: William		NO.: 1 OF 1
APPROVED BY: Rio		UNIT: mm
Company Website: http://www.bocentech.com		DATE: 2018-4-26